Cambridge Assessment International Education

Cambridge International AS & A Level

CANDIDATE NAME

CENTRE NUMBER

CANDIDATE NUMBER

3394932639

PHYSICS **9702/52**

Paper 5 Planning, Analysis and Evaluation **May/June 2022**

1 hour 15 minutes

You must answer on the question paper.

No additional materials are needed.

INSTRUCTIONS

- Answer **all** questions.
- Use a black or dark blue pen. You may use an HB pencil for any diagrams or graphs.
- Write your name, centre number and candidate number in the boxes at the top of the page.
- Write your answer to each question in the space provided.
- Do **not** use an erasable pen or correction fluid.
- Do **not** write on any bar codes.
- You may use a calculator.
- You should show all your working and use appropriate units.

INFORMATION

- The total mark for this paper is 30.
- The number of marks for each question or part question is shown in brackets [ ].

This document has **8** pages.

© UCLES 2022

1 Two parallel cylindrical conductors each have a small cross-sectional area A. A thin metal bar connects the two conductors, as shown in Fig. 1.1.

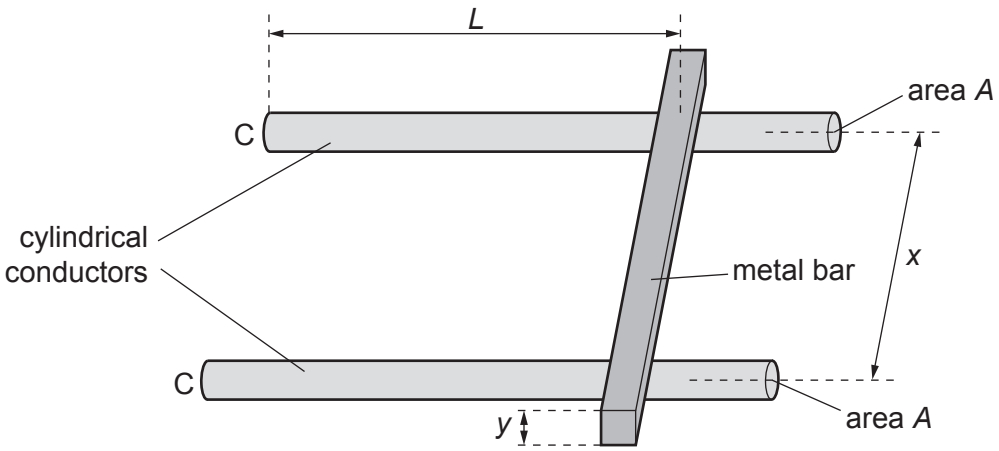

Fig. 1.1 (not to scale)

The metal bar has a square cross-section with sides of length y. For each conductor, the distance between its end C and the centre of the metal bar is L. The distance between the centres of the conductors is x.

The ends C are connected to a power supply and the current I in the conductors is measured.

It is suggested that I is related to L by the relationship

$$\frac{E}{I} = \frac{2PL}{A} + \frac{Qx}{y^2}$$

where E is the electromotive force (e.m.f.) of the power supply, and P and Q are constants.

Plan a laboratory experiment to test the relationship between I and L.

Draw a diagram showing the arrangement of your equipment.

Explain how the results could be used to determine values for P and Q.

In your plan you should include:

- the procedure to be followed
- the measurements to be taken
- the control of variables
- the analysis of the data
- any safety precautions to be taken.

© UCLES 2022

Diagram

.....

.....

.....

.....

.....

.....

.....

.....

.....

.....

.....

.....

.....

[15]

2 The brightness of some stars varies regularly. These stars are called variable stars.

Fig. 2.1 shows the variation of luminosity with time for a variable star.

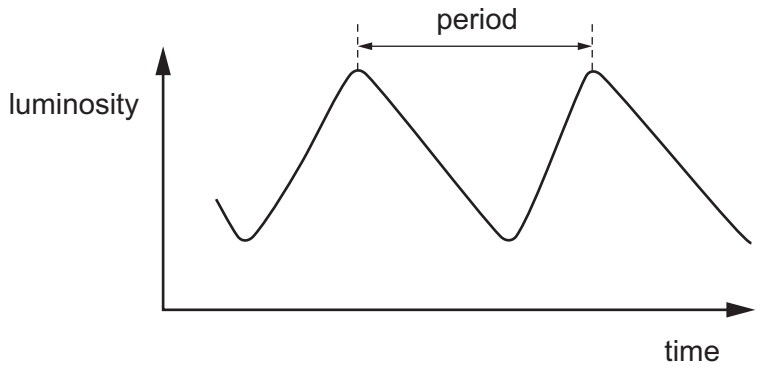

Fig. 2.1

A student determines the period T and mean luminosity L of the star.

The student repeats the process for different variable stars.

It is suggested that L and T are related by the equation

$$L = SKT^a$$

where S is the luminosity of the Sun, and a and K are constants.

(a) A graph is plotted of lg L on the y-axis against lg T on the x-axis.

Determine expressions for the gradient and y-intercept.

gradient = ...

y-intercept = ...
[1]

(b) Values of T and L are given in Table 2.1.

Table 2.1

T / days	$L / 10^{30}$ W	lg (T / days)	lg ($L / 10^{30}$ W)
22	2.9 ± 0.2		
32	4.9 ± 0.2		
42	6.9 ± 0.2		
54	9.8 ± 0.2		
78	16 ± 2		
97	21 ± 2		

Calculate and record values of lg (T / days) and lg ($L / 10^{30}$ W) in Table 2.1.
Include the absolute uncertainties in lg ($L / 10^{30}$ W). [2]

(c) **(i)** Plot a graph of lg ($L / 10^{30}$ W) against lg (T / days).
Include error bars for lg ($L / 10^{30}$ W). [2]

(ii) Draw the straight line of best fit and a worst acceptable straight line on your graph. Label both lines. [2]

(iii) Determine the gradient of the line of best fit. Include the absolute uncertainty in your answer.

gradient = ... [2]

© UCLES 2022

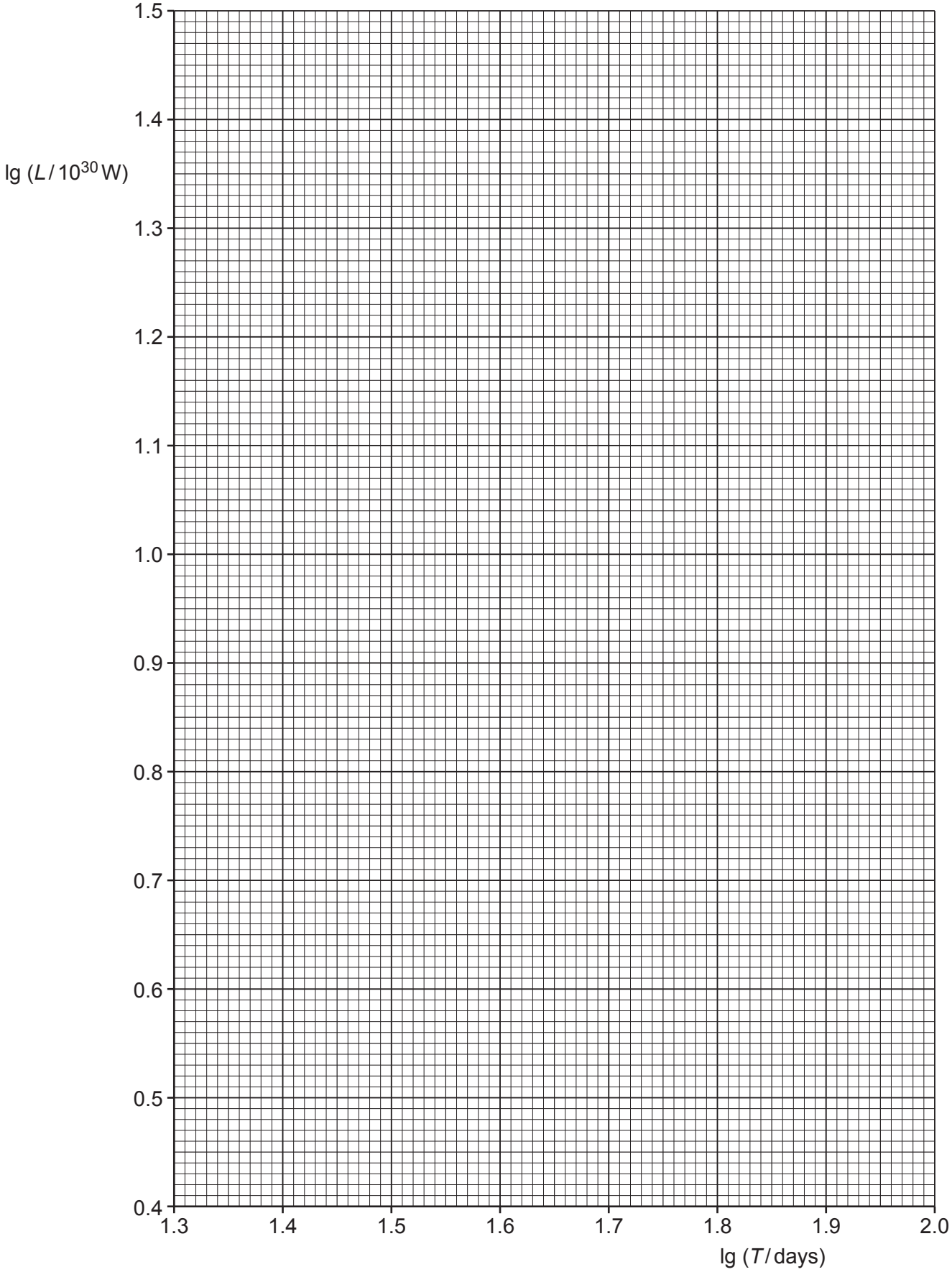
1.5
1.4
lg (L / 10^30 W)
1.3
1.2
1.1
1.0
0.9
0.8
0.7
0.6
0.5
0.4
1.3
1.4
1.5
1.6
1.7
1.8
1.9
2.0
lg (T / days)

(iv) Determine the *y*-intercept of the line of best fit. Include the absolute uncertainty in your answer.

y-intercept = ... [2]

(d) Using your answers to **(a)**, **(c)(iii)** and **(c)(iv)**, determine the values of *a* and *K*. Include the absolute uncertainties in your values. You need not be concerned with units.

Data: $S = 3.85 \times 10^{26}$ W

a = ...

K = ...
[3]

(e) A variable star has a period of 5.0 days.

Determine the luminosity *L* of this star.

L = ... W [1]

[Total: 15]

To avoid the issue of disclosure of answer-related information to candidates, all copyright acknowledgements are reproduced online in the Cambridge Assessment International Education Copyright Acknowledgements Booklet. This is produced for each series of examinations and is freely available to download at www.cambridgeinternational.org after the live examination series.

© UCLES 2022